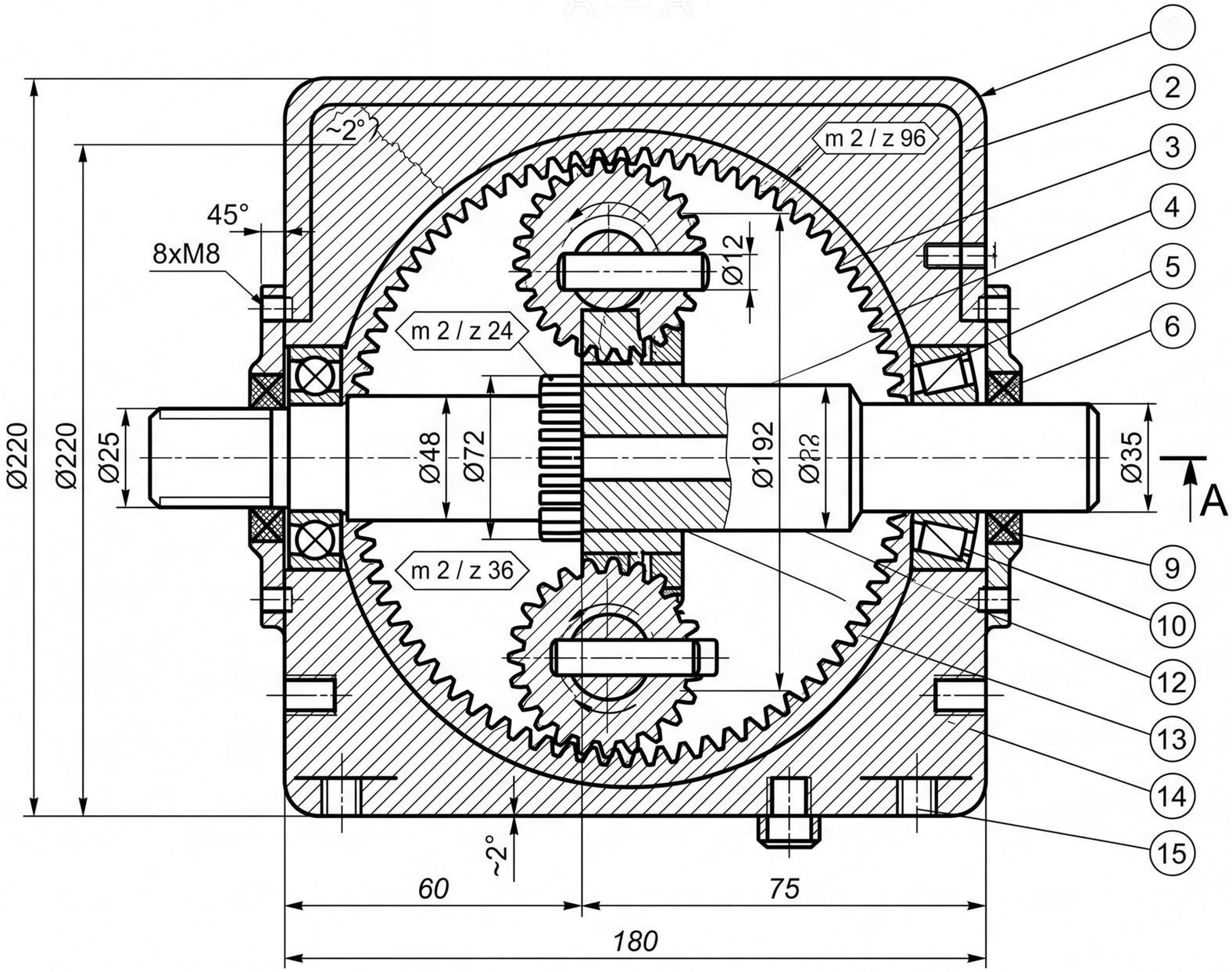


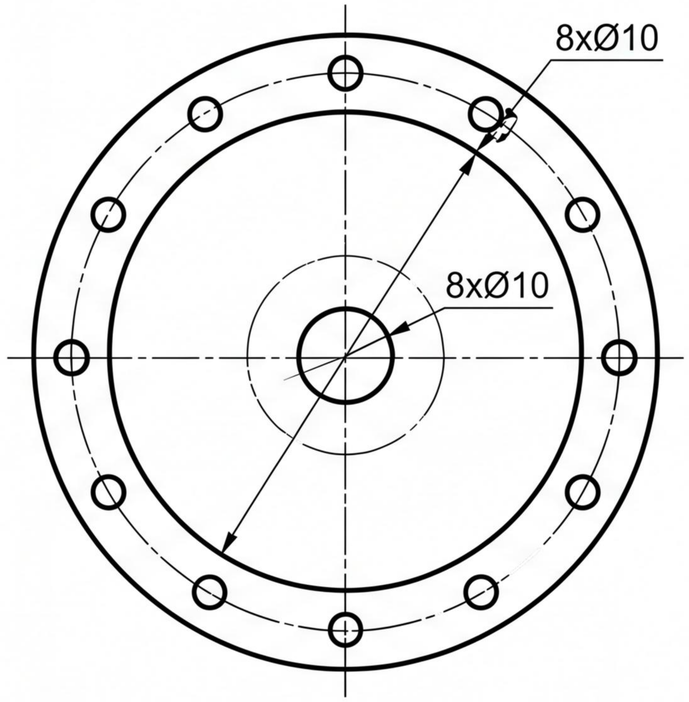


| | | | | | | | |
|---|---|---|---|---|---|---|---|
| | | | | | Single-stage planetary gearbox | | |
| Sh. | Doc. # | Sign | Date | AIDEMICA.DM.003.00.00 GA | St. | Mass | Scale |
| Drawn | | | | | D | | 1:2 |
| Check | | | | | Arch | | Sheets |
| T.ctrl | | | | | | | |
| N.ctrl | | | | Assembly drawing | Aldemica | | |
| Appr. | | | | | | | |